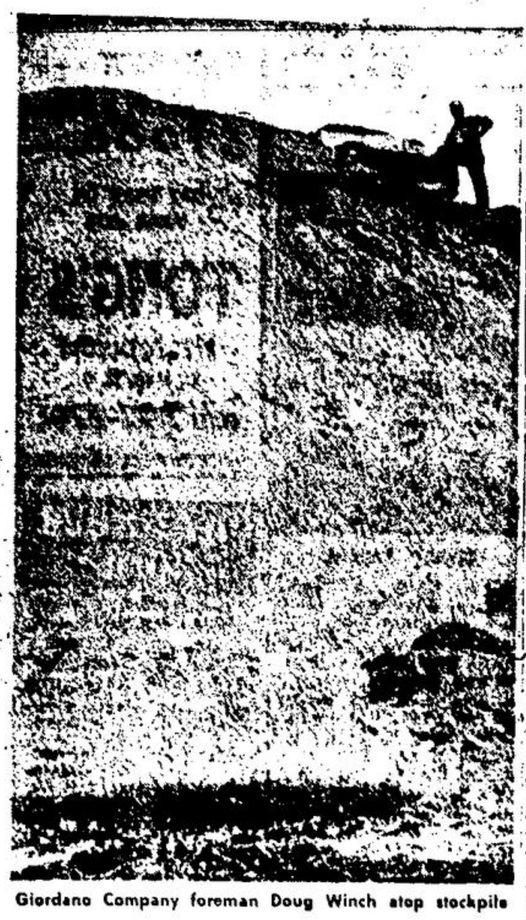

Giordano Company foreman Doug Winch atop stockpile

CN Stockpile Mountain A Mile North of Town

The biggest year for construction on Canadian National's Toronto Terminal Project is in full swing.

John L. Cann project director, said top priority has been given to the controlling of dust a problem augmented by the recent heat wave. Best way to resolve this difficulty was a covering of gravel which was being shipped to the Project at the rate of 150 freight cars a day — or two maximum tonnage trains.

One operation just north of the Georgetown yard will again activate a section of the Northern line. A spur line has been laid into a field bordering the 9th line of Esquesing and trucks are right now hauling gravel from the Denome farm there, creating a mountainous stockpile by the new track.

Amount of Gravel Fantastic

The tonnage of gravel required for the project has been fantastic. Since the access line is the highest standard of railway line located over an area with rivers, streams and valleys, it has been necessary to provide for deeper cuts and higher fills to keep the gradient to a minimum since trains can't run up hills like automobiles.

Mr. Cann pointed out that subterranean watercourses at first bedevilled the CN engineers, but subsequently they were able to lick the problem through a set-up of ancillary drains.

One of the CN's biggest headaches was the bottomless bog near the 3rd line of Esquesing that held up tracklaying on the Georgetown — Milton double track line.

When the stockpiling just north of Georgetown yard is completed the CN will have a standing volume of 200,000 tons of gravel easily accessible to open cars.

Eleven Giordano Sand and Gravel trucks have been hauling the material from the nearby pit at the rate of 8,000 tons a day. To date, 155,000 tons have been stockpiled.

Elsewhere On The Project

An army of railway and construction workers is completing diverse objectives on the railway access line from Dunbarton to Burlington. Another work force is deployed over the Toronto Yard site — heart of the Project — where 6,000 freight cars a day will be classified when it opens in Spring, 1965.

A year from now, all tracks will be laid. All bridges separating railway traffic and rail and road traffic are complete.

First floodlighting in the sorting yard will be installed in autumn and should night work then be necessary it could be done more easily by the new illumination.

Third of Track Line

Construction on the Administration building has started and the Centralized Traffic Control area will be ready for occupancy in the early part of 1964 while the railway crews' hotel section will open in May. By the end of 1964 the CTC section will control all traffic from Pickering to Burlington as well as the area from just east of Hamilton through to and including Oakville and the line from Richmond Hill to Toronto.

Turning from the yard to the accessline, he reported that 30 of 48 bridges had been completed and the remainder were 50 to 90 per cent complete.

The access line — dubbed the railway 401 — is made up 35 miles of new track, 27 miles of double tracking of existing single line and 38 miles of completely rebuilt single main line track. Work gangs have laid 25 per cent of the track, another 35 per cent is to be laid this year and by next year the line will be complete.

Construction on Schedule

Examples of "the beginning" and "the end" of track laying could be found on the stretch of line curving like a crescent around Metropolitan Toronto. At one point gangs are grading the track site, while at another track is completed and CTC signalling has been made fully operational.

So far Cann and his engineers have yet to meet a problem that has beaten them. Some of the problems have slowed down some phases of work at times but generally deadline are met and the construction of the $75,000,000 Toronto Terminal Project is on schedule.

ASHGROVE

Oakville Man Buys Frank Wilson Farm

Another change is taking place in our little village. Mr. and Mrs. Frank Wilson have sold their farm to Mr. and Mrs. John Reed of Oakville. There's always a touch of sadness when we hear of these sales but time always makes changes and life has to go on.

• • •

The summer is slipping away now we are into August and when harvesting and all ready one can notice darkness creeping in a little earlier at nights.

• • •

Miss Marion McKinnes of Erin visited last week with Mr. and Mrs. Fred Sayer and family.

• • •

Congratulations to our two beauties, Bonnie — she was married in the church Evelyn Bird and Bill Speck on Friday evening, July 26th and Marilyn Wilson and Graham Bryce on Saturday afternoon, August 3. We wish them all the happiness that life has to offer.

• • •

Sympathy extended to Mrs. Charles Wright and her family in the death of her brother-in-law, Mr. Dougtanger of Georgetown.

• • •

Congratulations to Veronica Nurse who won the title of Halton County Dairy Princess at Hornby. Best of luck to her at the C.N.E. when she will compete for the Ontario Dairy Princess title.

• • •

Mr. and Mrs. Harold Bailey, Brian and Eddie have returned from a delightful two-week holiday up at Haliburton and Minden.

BACK FROM CAMP NIAGARA....

Lorne Scots Enjoy 'Record Year'

The Lorne Scots chalked up a record at summer camp this year by having the largest turnout of any militia unit in Central Command (Ontario). The week, beginning July 20 and ending July 27, featured training for the forthcoming Presentation of Colors, and again provided the Peel, Dufferin and Halton counties regiment with an opportunity to train in battalion formation. Spread as they are throughout a large area, summer camp provides one of the few opportunities for concentrated training. Moreover, it enables the unit to co-ordinate with the other 13 formations making up 17 Militia Group, which is commanded by Brampton's Col. S. R. Charters, CD, himself a former Lorne Scot CO.

The first three days at Camp Niagara were preoccupied with ceremonial drill supervised by RSM Keil Murray of Acton and Major J. G. Miller of Brampton.

Battle Exercises

Battalion exercises on Thursday were commanded by Lt.-Col. E. F. Conover, CD, Brampton and Major R. G. Hardie, CD of Islington. This was a "combined manoeuvres" involving all units at camp who for this exercise were commanded by Col. Conover. The exercise involved an advance to contact the "enemy" and an attack supported by artillery fire, medium machine guns and mortars. To further simulate wartime conditions, the Royal Canadian Army Medical Corps set up realistic casualties with all the gory details. The Royal Canadian Ordnance Corps established a mobile bath and laundry unit and the Royal Canadian Electrical and Mechanical Engineers supplied recovery facilities for all vehicles. The artillery was amply supplied with 105 mm blanks which added further authenticity to the scheme. Communications for the various units were handled by the Royal Canadian Corps of Signals, Hamilton detachment.

With scarcely time for shave, shower and shampoo that same night 32 indefatigable Lorne Scots led by Lt. Don Egan of Brampton and Lt. Ian Kirkwood, of Oakville, struck off into the darkness on combat leadership training. This consisted of a patrol over 15 miles of rough, wooded terrain in which they encountered at least 15 enemy positions manned by seasoned permanent force NCOs.

Indians Were Scouts

Scouts for the Lornes that were full blooded Ojibway Indians led by L/Cpl. Walker of Brampton who proved invaluable under cover of darkness. Tired, and weary after their all night adventure the patrol managed to sing their way back to camp where they were met by the Pipes and Drums and paraded through the lines of sister units to their own tent lines and were again paraded that afternoon for Col. Charters' ceremonial inspection. One of their prisoners from the night patrol was Mac Hardie, the other a Pl. sergeant.

Pipe Major Lee Sievers of Brampton and Drum Major Finn MacCallum of Milton had the largest assembly of pipes and drums at camp and took part in a retreat ceremony at Fort George, and a massed band concert at Niagara-on-the-Lake on Thursday night.

Capt. Elgin Corbett of Burlington, the unit's director of music was in charge of all the brass bands at camp.

Busiest Officer

Busiest officer at camp, according to the CO, was Major John M. Kirkwood who was the CO of the unit's advance party, and while at camp ran the unit's kitchens, the stores and was president of the officers' mess. Sgt. George Langridge of Orangeville was loaned to the Royal Hamilton Light Infantry of Hamilton as kitchen supervisor, while Sgt. Billie Halliday of Orangeville was supervisory cook for the Lornes.

Best company lines (neatest tent housekeeping) won a trophy for B Company, Oakville, commanded by Major Gord Leonard with CSM Noel Weir, Cooksville.

Capt. Arthur MacRae of St. James the Apostle Church, Brampton, unit padre, arrived to time from summer vacation at Long Island to participate in the annual officers' pistol shoot in which he shot a perfect target.

ONE OF A SERIES.....

Build It Yourself

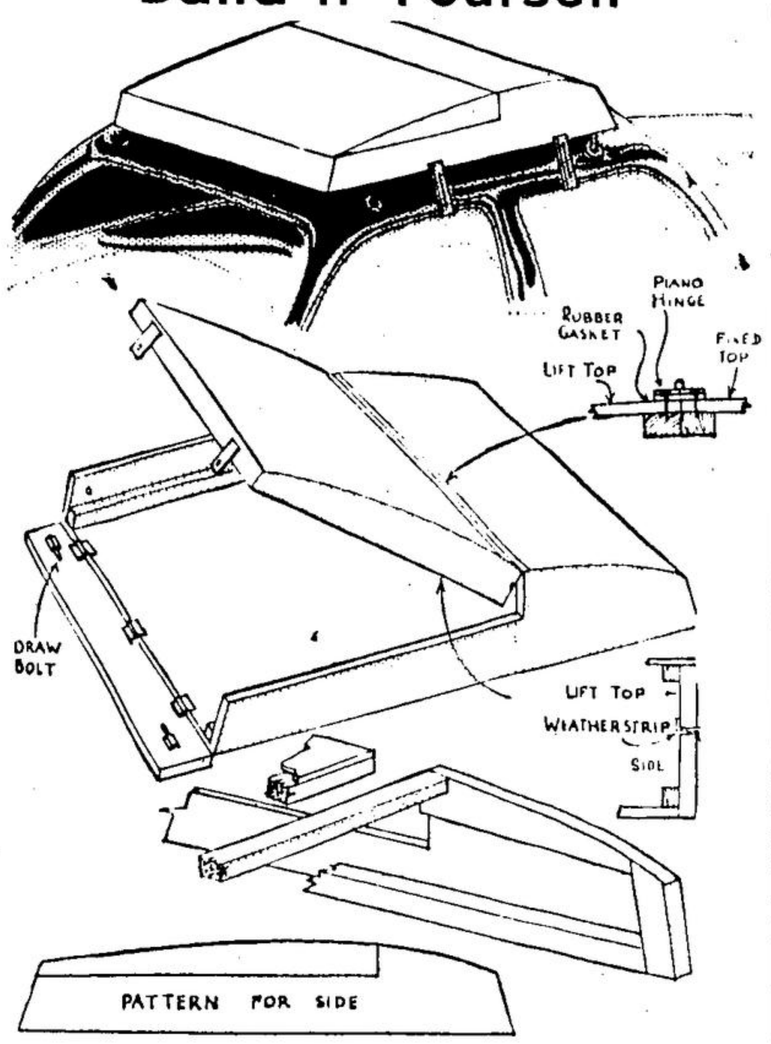

A simple, easily-built carrier for handling that extra luggage

[illegible] and drop these pieces [illegible] to effect with a bolt hinge [illegible] and screwed with draw bolts [illegible] Complete the frame [illegible] the lift top section by [illegible] the two lift top sides [illegible] cross framing [illegible] When applying the top coat [illegible] to place the lift top frame in [illegible] on the fixed sides and [illegible] piece of plywood [illegible] the whole unit [illegible] and screwing with the aid of [illegible] The cut where the pieces [illegible] can be made [illegible] with a sabre saw or with [illegible] saw and guide battens [illegible] The cut should be careful [illegible] primer paint [illegible] finally with enamel in a [illegible] to match or complement [illegible] The back hatchboard [illegible] that of your car.

Halton Medical Officer Urges Typhoid Vaccine

Despite the fact that typhoid vaccinations are not on the routine list of inoculations, Georgetown residents planning trips to Southern Europe or Asia are urged to have them, according to Dr. Archie Bull, medical officer of health for Halton.

"Vast improvement in sanitary conditions over the years has made routine inoculations unnecessary," Dr. Bull explained.

"As long as summer travelers make sure that sewage disposal is adequate and water supplies safe there is no need for typhoid vaccinations before taking a trip anywhere in Canada, Ontario or the United States, Northern Europe or Great Britain," Dr. Bull said.

Sanitation is poorer in South Europe and Asia he pointed out, and there is why inoculations are urged before a trip to these areas.

Two main factors have contributed to the decision to eliminate typhoid vaccinations from being a routine procedure: they do not produce 100 per cent immunity, and the side effects are unpleasant, Dr. Bull pointed out.

He said that apart from military personnel who are likely to be transferred to other parts of the world few local residents are likely to have received the shots.

The immunization program for typhoid usually requires three doses with two vaccines generally in use. The first tagged TAB spaces the three shots a week to ten days apart and provides against typhoid of three varieties. The second, called TABT, includes tetanus, and the doses are spaced a month apart.

Dr. Bull explained that there is a third variety of inoculation only to the military, called TABTD, which also includes immunization against diptheria.

NEWS ECHOES

News Echoes from the pages of The Herald, 1953 and 1938.

10 YEARS AGO

- New seats installed last week in the Roxy Theatre on Mill St. will add greatly to the comfort of showgoers. The entire centre section has been replaced with upholstered seats and the older type wooden ones have been discarded. Later new seats are also planned in the two side sections. This is the first step in extensive renovating.
- A cavalcade of honking motor cars followed Halton's new member of parliament, Sybil Bennett, Q.C. of Georgetown, in a victory parade around town Monday night when the word was received at the Progressive Conservative headquarters that Liberal Murray McPhail had been defeated.
- Receiving good news when the Grade 13 exam results were sent out this week were Mary Beckett, Elling Berg, Julia DeVries, William Hughes, George McClure and Eleanor Schenk.

25 YEARS AGO

- With war clouds looming on the horizon, a special service was held in the United Church following the regular church service on Sunday evening when prayers were offered for peace throughout the world. Resident ministers, laymen and ladies took part in the prayer service. It was well attended.
- At a meeting of the doctors of Georgetown-Brampton last week Dr. C. V. Williams of Georgetown was elected head of the medical staff of the Peel Memorial Hospital, Brampton.

NOW OPEN
THE MUSIC BOX
GOOD FOOD AND DANCING to the Juke Box
7 Days a Week
R. R. 4 — Georgetown
Town Line - North of Norval

SIDNEY KAPLAN....

ANNOUNCES THAT HE HAS COMMENCED PRACTICING LAW IN THE TOWN OF GEORGETOWN AT THE CARRETAL BUILDING 116 MOUNTAINVIEW ROAD SOUTH IN ASSOCIATION WITH JOHN D. ORD, Q.C. UNDER THE NAME
KAPLAN & ORD
877-6956

BUSINESS DIRECTORY

W. H. CARR, P. Eng.
Consulting Professional Engineer
118 Mountainview Rd. S.
TRiangle 7-2211
Res. TR 7-3300

CARR & WESTWOOD
Ontario Land Surveyors
116 Mountainview Rd. S.
TRiangle 7-2211
W. H. Carr B. F. Westwood
TR 7-3300 Res. TR 6-6164

BARRAGER'S
Cleaners-Shirt Launderers
TR. 7-2279
18 Main S. — 166 Guelph
All work done on premises

WALLACE THOMPSON
3rd Division Court
Clerk & Commissioner
TR. 7-2963

GEORGETOWN ANIMAL CLINIC
V. Zavitz, DVM
B. Footman, MRCVS
106 Guelph Street
Clinic Open 7 p.m. - 9 p.m.
MON., WED., FRI.
Sat. afternoon - 1-3

FRANK PETCH
LICENSED AUCTIONEER
Prompt Service
P.O. Box 413
TR. 7-2884, Georgetown

PRINTING OF DISTINCTION
- STATEMENTS
- LETTERHEADS
- ENVELOPES
- WEDDING INVITATIONS

Georgetown Herald
TR. 7-2201

DONALD A. GAY, D.C.
Tues., Thurs. & Sat.
for appointment call
TR 7-3401
GEORGETOWN CHIROPRACTIC CLINIC
2 Main Street South

E. L. BUCHNER, O.D.
(Doctor of Optometry)
OPTOMETRIST
181 Guelph Street
(Scott Car Bldg.)
Wednesday Evenings Only
7.45 - 9.00 p.m.
by appointment
TR. 7-2251 (Scott's)

FOR EXPERT EYE CARE
— consult —
O. T. WALKER
Oculist prescriptions filled
12 Main St. S. Brampton
GL. 1-4474; Res. GL. 1-6243
Hours 9 a.m. 6 p.m. daily
Friday 9 a.m. to 9 p.m.
Evenings by appointment

Robt. R. Hamilton
Optometrist
Eyes Examined
Prescriptions Filled
60 Main St. N.
Open Daily (except Mondays) Evenings by appointment - 877-3971.

MONUMENTS
POLLOCK & CAMPBELL
DESIGNS ON REQUEST
Inspect our work in Greenwood Cemetery
PHONE 621-7580
62 Water Street North
GALT

THE DIRECTORY is the Key to Business Success — Use it and see

Dale, Bennett, Latimer & Baines
Barristers & Solicitors
DOUGLAS V. LATIMER
TERENCE F. BAINES
TRiangle 7-3381
23 Mill St. Georgetown

George C. Hewson
Barrister and Solicitor
116 Mountainview Rd. S.
(Carretal Building)
Georgetown
TR. 7-2218

Frederick A. Helson
Barrister and Solicitor
116 Mountainview Rd. S.
(Carretal Building)
Georgetown
TR. 7-2209

M. E. Manderson, Q.C.
Barrister and Solicitor
61 Mill St. Georgetown
TR 7-3364

T. Van Sickler, B.A.
Barrister, Solicitor, Notary
(Dr. Williams Bldg.)
36 Main S. TR 7-4531

Kaplan & Ord
Barristers and Solicitors
SIDNEY KAPLAN and JOHN D. ORD, Q.C.
116 Mountainview Rd. S.
(Carretal Building)
877-6956

ALL MATERIALS FOR ABOVE AVAILABLE FROM
BEAVER LUMBER
11 Water St.
TR. 7-2234
Open Friday till 9
Saturday until noon

Milk And Ice Cream Not Contaminated

County health officer Dr. Archie Bull says milk and ice cream in Halton are not contaminated. He made the statement when told about reports of unsafe milk and ice cream in Kent County.

Two dairies in Chatham and Elmira were found to have below standard milk. And 10 soft ice cream outlets tested had contaminated ice cream.

Bulk refrigeration lessens the danger of contamination of milk, Dr. Bull said. He added that bulk refrigeration is used by most of Halton's milk producers.